IJEAST

INTERNATIONAL JOURNAL
OF ENGINEERING APPLIED SCIENCE
AND TECHNOLOGY

VOLUME : 6 **ISSUE : 4** **Print / Issue Publication Date: 17-Oct-2021**

ISSN : 2455-2143

Indexed In

Google SCHOLAR · OPEN ACCESS · doi · Crossref

WWW.IJEAST.COM

editor@ijeast.com

International Journal of Engineering Applied Sciences and Technology, 2021
Vol. 6, Issue 4, ISSN No. 2455-2143, Pages 266-275
Published Online August 2021 in IJEAST (http://www.ijeast.com)

TIME SERIES FORECASTING USING ARTIFICIAL NEURAL NETWORK WITH EXTENDED ADAPTIVE LEARNING

Mr. Dhanaji Vilas Mirajkar
Computer Engineering
Rajarambapu Institute of Technology
Islampur (Maharashtra), India

ABSTRACT - Artificial neural network (ANN) mainly consists of learning algorithms, which are require to optimize the convergence of neural networks. We need to optimize the convergence of neural networks in order to improve the speed and accuracy of decision making process. To enable the optimization process one of the widely used algorithm is back propagation learning algorithm.

Objective of study is to applied backpropagation algorithm for solving multivariate time series problem. To better the accuracy of neural network it is important to find optimized architecture for the problem under consideration. The learning rate is also an important factor which affects the performance of result. In this study, we proposed extended adaptive learning approach in which learning rate is adapted from number of previous iteration error trend in first half of training. In next half of training learning rate is adapted as per adaptive learning rate algorithm. Compare performance of three variation of backpropagationalgorithm. All these variation experimented on two standard dataset. Experimental result shows that during validation and training ANN with extended adaptive learning rate outperforms other than two variations.

Keywords - Artificial Neural Network (ANN), Backpropagation Algorithm, Adaptive Learning Rate, Extended Adaptive Learning Rate, Transfer Function

I. INTRODUCTION

For planning and decision making process forecasting play important role. Time series forecasting means predicting future values using historical data. Time series forecasting has a wide variety of application in many different fields of operation management, marketing, economics, industrial process control and demography. In operation management forecasting approach is used for Control inventories, manage the supply chain, and determine staffing requirements and plan capacity. Prediction is useful for taking marketing decision by finding sales response, advertisement expenditure and product effectiveness. Forecasting is also play important and major role in economics such as prediction of major economic variable, interest rates, inflation (currency growth), job growth, production, and consumption. Forecasts are an integral part

SAMPLE: Permission to make digital or hard copies of all or part of this work for personal or classroom use is granted without fee provided that copies are not made or distributed for profit or commercial advantage and that copies bear this notice and the full citation on the first page. To copy otherwise, or republish, to post on servers or to redistribute to lists, requires prior specific permission and/or a fee.
Conference'10, Month 1–2, 2010, City, State, Country.
Copyright 2010 ACM 1-58113-000-0/00/0010 …$15.00.
DOI: http://dx.doi.org/10.1145/12345.67890

of the guidance behind monetary and fiscal policy and budgeting plans and decisions made by governments. Forecasts of population by country and regions are made routinely, often stratified by variables such as gender, age, and race. Demographers also forecast births, deaths, and migration patterns of populations. Governments use these forecasts for planning policy and social service actions, such as spending on health care, retirement programs, and antipoverty programs [1].

The rest of the paper is organized as follows: In Section 2, discussed backgrounds of backpropagation algorithm its drawback. Key points for ANN architecture are described. Methodology and proposed method are explained in Section 3. Section 4 is about discussion of results obtained from ANN implementation and its variations. Finally, the conclusions of our study are outlined in Section 5.

II. BACKGROUND & LITERATURE REVIEW

1.1 Backpropagation Algorithm (BP)

In forecasting backpropagation algorithm is widely used. Some of applications from literature is discussed below. Temperature forecasting is also important issue to protect life and to take agricultural decisions. Ch. Jyosthna Devi et al. done temperature forecasting using ANN by collecting

quantitative data about current state of atmosphere. For learning in ANN author uses backpropagation algorithm [2]. In "Application of Back-Propagation Artificial Neural Network to Predict Maintenance Costs and Budget for University Buildings" paper author predict the maintenance cost using independent variables like age of building, number of floors, and elevator facilities. For this purpose author uses basic backpropagation algorithm [3] .

Somnath Mukhopadhyay has proposed that external factors like government involvement; security issues, etc. affected e-commerce growth (and may continue to be). Artificial Neural Networks (ANN or simply NN) is a logical choice for such modelling. ANN has two key advantages over the traditional methods. Because of neural-like connections in the network, this modelling technique is sometimes called a connectionist approach [4].

Working of Backpropagation

BP is a learning algorithm based on gradient descent in which weights are adjusted to reduce the system error. For training BP algorithm work in two stages forward pass and backward pass

In forward input pattern is given to input layer. The input layer passes the pattern activations to the neurons in hidden layer. Output of hidden neuron is input of output layer. The forecasted output neural network is acquired from the activations of the output layer. Error is calculated by actual minus forecasted value. In backward pass error is used to update the weights and it repeated to n number of epochs. As per error and learning rate used weight is updated at hidden layer and output layer. Forward pass and backward pass step is repeated for each training pattern till stopping criteria met. Epoch is an iteration through which the entire training set is trained [5].

Drawback of Backpropagation

Under-Fitting in ANN

If training done by ANN model is very poor means model is unable to find out relationship between the input values and the target value [6].

Over-Fitting in ANN

In this process of overfitting, the performance on the training examples still increases while the performance of validation set becomes worse [6]. Over learning or overfitting occurs when an the algorithm is run for too many epochs or unseen data is very different from training dataset [7].

Authors in [7] try to minimize under-fitting and overfitting in ANN using following strategy, If under-fitting occurs (ANN doesn't attain an adequate performance level) try adding more hidden nodes to the hidden layer(s). If over-fitting occurs (validation error rise) try to minimize hidden layer size

1.2 Key Points for ANN Architecture

ANN accuracy depends on architecture model of neural network. Various researchers' works on architecture of forecasting model key points for ANN architecture are listed below

No of nodes in hidden layer [8] [9] [10]

Hidden layer size also affects the performance of ANN. Less number of hidden neuron cause poor training while too may many hidden neurons in hidden layer leads overfitting.

Transfer Function

Each hidden node and output node applies transfer function to input patterns [9]. The selection of transfer functions may strongly impact complexity and performance of neural networks and have been play key role in the convergence of the training algorithms [11].

The learning rate

Backpropagation algorithm performance can be improved by finding optimal learning rate. For a new user selection of optimal learning rate is very challenging. Learning rate is multiplied by a negative gradient to determine the change in the weights and biases. The learning rate is higher, the greater the step . If the learning rate is made too large, the algorithm becomes unstable. If the learning rate is too small, the algorithm takes a long time to converge [10].

Learning rate is the basis of a two-layer neural network (NN) of the training process. Therefore, many studies have been done to find the best learning rate, so that the maximum error reduction can be achieved in all iterations. Choose a good learning rate decrease training time, but it may require a lot of trial and error [12].

III. METHODOLOGY & PROPOSED METHOD

a. Implementation Steps:

In order to develop a neural network, we use the back-propagation learning algorithm. We use the following steps to train and validate network.

1) Data Pre-processing :

Neural network training could be made more efficient by performing certain preprocessing steps on the network inputs and targets. Without this standardization, training the neural network will be very slow. There are many types of data normalization. It can be used to scale in the same range for each input feature value data, one feature to another in order to minimize bias neural network. Different techniques can apply different patterns such as max rule, min rule, sum rule, product regulation and hence along [13]. We used Z-score normalization technique which is discussed below

Statistical or Z-Score Normalization

International Journal of Engineering Applied Sciences and Technology, 2021
Vol. 6, Issue 4, ISSN No. 2455-2143, Pages 266-275
Published Online August 2021 in IJEAST (http://www.ijeast.com)

In this technique mean (μ) and standard deviation (σ) of each feature vector is calculated. The transformation is applied to input vector as per equation 3.1

2) Defining Topology

Input neurons

Input neurons only receive information from predictor or user and pass them to hidden layer. It is dispatcher of information from user to hidden layer. In ANN there is

Number of hidden layers in Neural Network

For almost all problems, single hidden layer is satisfactory. Two hidden layers are required when data is like a saw tooth wave form. Using two hidden layers hardly improves the performance. On that point is no theoretical accepting for utilizing more than two hidden layers [9].

Selection of Hidden Layer Size

As per describe earlier there are two types of effect occurred due to the hidden layer size which are overfitting and under-fitting [7]. Selection of proper number of hidden neuron is very important. A researcher gives various methods to find optimal hidden layer size some of them are discussed below.

Forward Approach- This method first selects a small number of hidden neurons. We usually start with two hidden neurons. Later, training and validate the neural network and then increase the number of hidden layer neurons. Repeat the above steps until the training and validation improvement [14].

Backward Approach- This practice is a long-term approach. In this way , we were starting a large bit hidden neurons. Then prepare and validate the NN. Then gradually reduce the number of hidden neurons and retraining and testing NN. Repeat the process until the training and validation results are improved [14].

Rule of thumb method [9][14] - Rule of thumb is to adjust the hidden layer neurons initially, following are rules to set hidden layer size initially:

a) The number of hidden neurons should be in the range between the sizes of the input layer and the size of the output layer

b) The number of hidden neurons should be 2/3 of the input layer size, plus the size of the output layer

c) The number of hidden neurons should be less than twice the input layer size

Output Neurons

Initialize number of output neurons depend on the dataset which is applied.

Transfer function

In this implementation we used tansig transfer function at hidden layer and purlin at output layer.

Training/Learning

$$x' = \frac{x_i - \mu_i}{\Sigma \sigma_i} \qquad (3.1)$$

Training means updating the synaptic weights of a neural network by considering error at each epoch and learning rate for that epoch .

Performance Measurement:

Performance measurement of ANN in forecasting application is done by RMSE and MAPE (Mean Absolute Percentage Error) [15]. Performance of ANN is calculated in this paper by Root Mean Square Error (RMSE) (also called the root mean square deviation, RMSD) which is calculated by using following formula,

$$RMSE = \sqrt{\frac{\sum_{i=1}^{n} (X_{obs,i} - X_{model,i})^2}{n}} \qquad (3.2)$$

Another factor to find performance of ANN is Mean Absolute Percentage Accuracy (MAPA) which is calculated considering MAPE and is given by in equation 3.3,

$$MAPA = \frac{100 - (Absolute\ (Actual - Forecast))}{Actual} * 100 \qquad (3.3)$$

b. ANN Model

In the paper we use the model shown in Figure 1. Here we change the number of inputs and hidden layer size.

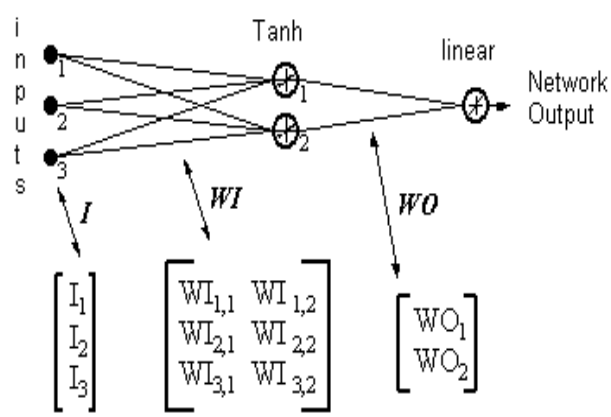

Figure 1.ANN Model (taken from [16])

Where I: inputs,

WI: weight associated with input neuron and

International Journal of Engineering Applied Sciences and Technology, 2021
Vol. 6, Issue 4, ISSN No. 2455-2143, Pages 266-275
Published Online August 2021 in IJEAST (http://www.ijeast.com)

WO: weight associated with hidden neuron

As an architecture point of view from figure 1 our forecasting ANN model consist of three layer input layer ,hidden layer and output layer. For each input layer we assigned weight WI and weight associated with hidden neuron is called WO. Here we used tansig transfer function at hidden layer and purelin to output layer.

Mathematical model used for takin the output form neural network and hidden layer is discussed in following equation. Weight updating for generalization also discussed below which is referred in [16].

Output of Hidden Neuron is,

$$OHL = [Transfer\ Function\ (I^T.WI)]^T \quad (3.4)$$

Output of the network is calculated by;

$$Network\ Output = OHL.WO \quad (3.5)$$

$$ERROR = (Network\ Output - Required\ Output) \quad (3.6)$$

Weight update at Output neuron:

$$WO = WO - (LR \times ERROR \times OHL) \quad (3.7)$$

Weight update at Hidden neuron:

$$WI = WI - \{LR \times [ERROR \times WO \times (1- OHL^2)].\ I^T\}^T \quad (3.8)$$

Where

LR = Learning Rate

WI=Weight associated with input neuron

WO=Weight associated with hidden neuron

OHL= Output of Hidden Layer

c. ANN with Adaptive Learning Rate

. The variable learning rate method is used for the self-adaptive adjustment of reading rate, according to the change of error. The formula below shows the adaptation of learning rate [17]:

$$\alpha(t+1) = \begin{cases} k_{inc}\,\alpha(t) & \text{if } E(t+1) < E(t) \\ k_{dec}\alpha(t) & \text{if } E(t+1) > E(t) \\ \alpha(t) & \text{Otherwise} \end{cases} \quad (3.9)$$

Here k_{inc} is learning rate incremental constant which is in between 1.06 to 1.08 and k_{dec} learning rate decrement constant which is normally 0.7 . Where α is learning rate, which incremented or decremented depends on current iteration error E (t+1) and previous iteration error E (t). t+1 = current iteration.

d. Proposed Method (ANN with Extended Adaptive Learning)

We proposed new method for learning rate adaptation is ANN with extended adaptive learning rate (ANN-EALR) in which we find error trend by considering more than 4 previous iteration error and as per equation given in 3.10 we update learning rate. In proposed approach we combine proposed method described in 3.10 with ANN-ALR method described in equation 3.9. We apply proposed method for first half of training phase. In second half of training phase applies the ANN-ALR algorithm.

Mathematical formulation of learning rate updating is given below,

For epochs 0 to epochs/2

$$\alpha(t+1) = \begin{cases} k_{maxinc}\,\alpha(t) & \text{if } E(t+1) < E(t\text{-}cn) \text{ for all } cn = 0 \text{ to } N \\ k_{dec}\,\alpha(t) & \text{if } E(t+1) > E(t\text{-}cn) \text{ for all } cn = 0 \text{ to } N \\ k_{maxdec}\,\alpha(t) & \text{if } E(t+1) < E(t\text{-}cn)\ \&\ E(t+1) > E(t\text{-}(cn+1)) \text{ for all } cn = 0 \text{ to } N \\ & \text{or} \\ & \text{if } E(t+1) < E(t\text{-}cn)\ \&\ E(t+1) > E(t\text{-}(cn+1)) \text{ for all } cn = 0 \text{ to } N \\ k_{l1dec}\,\alpha(t) & \text{if } E(t+1) < E(t\text{-}cn) \text{ more than } N/2 \\ k_{l2dec}\,\alpha(t) & \text{if } E(t+1) < E(t\text{-}cn) \text{ less than } N/2 \end{cases} \quad (3.10)$$

For epochs/2 to epochs

$$\alpha(t+1) = \begin{cases} k_{inc}\,\alpha(t) & \text{if } E(t+1) < E(t) \\ k_{dec}\alpha(t) & \text{if } E(t+1) > E(t) \\ \alpha(t) & \text{Otherwise} \end{cases} \quad (3.9)$$

Where

α = Learning Rate, E =Error, t = Iteration

N = Number of previous iteration error compared

k_{maxinc} =Maximum increasing constant (1.09 to 1.2)
k_{inc} =Increasing constant (In between 1.06 to 1.8)
k_{maxdec} =Maximum decreasing constant (0.08 to 0.9)
k_{l1dec} =Maximum decreasing constant (0.06 to 0.079)
k_{l2dec} =Maximum decreasing constant (0.04 to 0.059)

IV. RESULT AND DISCUSSION

For experimentation purpose we use real time multivariate dataset which are discussed below.

Dataset 1

Most important character of a complete solution in a neural network is a data collection. It depends on the pattern of neural networks for data quality, accessibility, reliability and relevance. For the implementation, we utilized information from the literature. On the real data collected from Chandigarh (India), National Bank of India branch basis for three months. Author chose this branch, because there are different types of branches, especially -salary accounts in order to have more data patterns. Data collection time is the 2004 2nd April to 30thJune2004 [18].

Dataset 2

Crop production is a complex phenomenon that is influenced by agro-climatic input parameters. Agriculture input parameters change from field to field and farmer to farmer. Gathering such data on a larger area is a daunting undertaking. All the same, the climatic information collected in India at every 1sq. m area in different portions of the district is tabulated by the Indian Meteorological Department [19]

a. Artificial Neural Network (ANN)

To test the performance of ANN we vary the number of hidden neurons by keeping constant learning rate 0.2, transfer function tansig-purlin and number of epoch 2000.The following Table 1 shows the performance of neural network by varying the number of hidden neurons by using forward selection approach n Dataset 1.

Table 1.Performance of ANN on Dataset 1

Hidden Layer Size	RMSE		MAPA	
	Training	Validation	Training	Validation
4	0.8504	2.3333	88.7205	83.2946
9	0.6788	**1.3246**	92.9124	**86.7309**
14	0.6761	1.7619	93.0060	85.4102
19	0.6826	2.0577	91.3091	83.4450
24	0.6601	2.4261	93.2381	82.8933
29	0.6356	4.1495	93.4902	82.2054
34	0.7404	3.3200	90.1188	80.4652
39	0.6493	4.7669	92.7456	69.2925

Same experimentation is done on data set 2 and results are tabulated in Table 2. In that we see that training accuracy is 100 percent but overtraining occurs in some cases.

Table 2. Performance of ANN on Dataset 2

Hidden Layer Size	RMSE		MAPA	
	Training	Validation	Training	Validation
4	15.8791	96.5184	99.0534	90.5065
9	0.0000	99.1723	100.0000	89.7757
14	0.0000	82.9639	100.0000	91.8808
19	0.0000	87.1491	100.0000	92.1268
24	0.0000	75.5362	100.0000	91.9908
29	0.0000	80.7726	100.0000	**92.3562**
34	0.0000	**77.5118**	100.0000	92.1446
39	0.0000	127.4094	100.0000	87.3315

From Table 2 for best case RMSE is 77.5118 and accuracy is 92.3562. But performance is greater than traditional ANN but not m

uch up to mark.

To test the effect of learning rate, we vary the learning rate from 0.05 to 5 by keeping constant transfer function tansig-purlin and number of epochs 2000.The following Table 2

International Journal of Engineering Applied Sciences and Technology, 2021
Vol. 6, Issue 4, ISSN No. 2455-2143, Pages 266-275
Published Online August 2021 in IJEAST (http://www.ijeast.com)

shows the performance of neural network with varying learning rate by using the forward selection approach. From Table 3 we find that 85.9561% accuracy when learning rate is 0.1 for this constant hidden layer size is 13.

Table 3. Effect of Learning Rate on Dataset 1

Learning Rates	RMSE		MAPA	
	Training	Validation	Training	Validation
0.05	0.6607	1.2882	91.5092	85.4854
0.1	**0.6656**	**1.2464**	**91.4464**	**85.9561**
0.15	0.6539	1.2930	91.5961	85.4315
0.2	0.6816	1.3641	91.2404	84.6298
0.25	0.6635	1.4727	91.4727	83.4060
0.3	0.6740	1.5377	91.3378	82.6740
0.35	0.6807	1.6193	91.2514	81.7545
0.4	0.5477	1.8113	93.2025	80.0540
0.45	0.6030	1.9254	92.2789	79.1045
0.5	0.6537	2.0820	91.5768	78.3567

Same experiment done on dataset 2 and result illustrated on Table 4

Table 4. Effect of Learning Rate on Dataset 1

Learning Rate	RMSE		MAPA	
	Training	Validation	Training	Validation
0.05	0.0664	82.9507	99.9959	91.2378
0.1	0.0000	76.2282	100.0000	91.7982
0.15	0.0000	94.4784	100.0000	90.1842
0.2	0.0000	75.5362	100.0000	91.9908
0.25	0.0000	92.7412	100.0000	89.9627
0.3	0.0000	106.2367	100.0000	89.4386
0.35	0.0000	103.7465	100.0000	88.9191
0.4	0	83.2871	100.0000	91.2297
0.45	0.0000	75.2128	100.0000	92.6277
0.5	0.0000	77.3600	100.0000	92.8676

Figure 2 shows that accuracy percentage is constantly decreasing by increasing learning rate for dataset 1. But for dataset 2 finding appropriate learning rate is difficult.

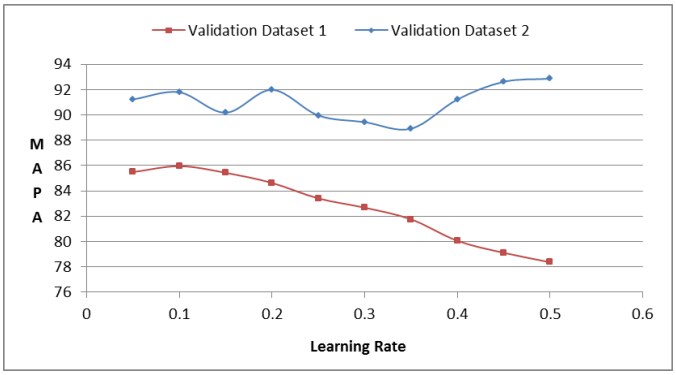

Figure 2. Effect of Learning Rate

b. Artificial Neural Network with Adaptive Learning Rate (ANN-ALR)

We apply the ANN-ALR algorithm which mention in equation 3.9 to dataset 1 and dataset 2 results are illustrated below by varying hidden layer size and by keeping the number of epochs 2000. In this case initially we have given learning rate 0.5.

Table 4 gives performances of ANN –ALR is given for dataset 1. In a best case performance in terms of RMSE is 0.9590 which is less as compared to ANN has1.3246. Mean Absolute Percentage Accuracy for ANN-ALR is 88.8470 which is greater than ANN 86.7309.

Table 5. Performance of ANN-ALR on Dataset 1

Hidden Layer Size	RMSE		MAPA	
	Training	Validation	Training	Validation
4	1.4306	3.9300	89.7483	73.7637
9	0.6187	1.0296	92.9921	88.0601
14	0.6126	1.0548	93.2347	87.5138
19	0.6213	1.0534	92.6968	87.4215
24	0.6174	**0.9590**	93.5174	**88.8470**
29	0.6135	1.0974	93.3365	87.8620
34	0.6163	1.0428	92.8461	87.1492
39	0.6041	1.0454	93.3419	87.7128

In Table 5 gives performance of ANN –ALR is given for dataset 2. In best case performance in terms of RMSE is 74.4263 which is less as compared to ANN. Mean Absolute Percentage Accuracy for ANN-ALR is 93.2082.

Table 6. Performance of ANN-ALR on Dataset 2

Hidden Layer Size	RMSE		MAPA	
	Training	Validation	Training	Validation
4	47.0217	76.5068	97.0131	89.7828
9	44.2850	77.4256	97.5287	86.7506
14	48.0040	85.3845	96.9970	90.0723
19	41.0187	91.4824	97.7651	93.2085
24	47.0399	86.5338	97.4454	**93.2082**
29	44.6093	**74.4263**	97.5606	92.1611
34	46.3399	83.1975	97.1565	90.6447
39	45.1490	82.8089	97.4039	90.0234

c. Proposed Method - ANN with Extended Adaptive Learning Rate (ANN-EALR)

As we discussed earlier in section 3.4 we combine the two methods described in equation 3.9 and 3.10 apply to dataset 1 and dataset 2. In ANN-EALR we keep same number of epochs taken in ANN-ALR and ANN i.e. 2000. Initially we keep learning rate 0.5 and hidden layer size 4. By forward selection method hidden layer size increases up to 39.

Result is illustrated in following Table 6. For best case RMSE validation is 0.8892 and accuracy is 90.6346%.

Table 7. Performance of ANN-EALR on Dataset 1

Hidden Layer Size	RMSE		MAPA	
	Training	Validation	Training	Validation
4	0.8107	2.4928	89.4257	78.8574
9	0.6463	0.9780	93.2789	89.5805
14	0.6404	**0.8892**	93.6305	**90.6346**
19	0.6451	0.9068	93.5007	89.7008
24	0.7489	1.6900	91.8412	87.3894
29	0.6167	1.0564	93.0462	88.4241
34	0.6476	1.2177	92.3184	85.5055
39	0.6132	1.0547	93.2179	88.6451

We applied it to dataset 2 also and result is mentioned in Table 7.For best case accuracy is 95.2591% and RMSE is 55.8696. ANN, ANN-ALR and ANN-EALR are compared in performance analysis section.

Table 8. Performance of ANN-EALR on Dataset 2

Hidden Layer Size	RMSE		MAPA	
	Training	Validation	Training	Validation
4	42.6715	77.9943	97.0943	92.7469
9	4.5194	70.0866	99.6327	93.2079
14	4.5366	67.1637	99.7248	93.0404
19	0.2336	60.1889	99.9871	94.6249
24	6.7803	**55.8696**	99.5007	**95.2591**
29	6.0797	77.4789	99.5208	92.4711
34	4.2169	63.0233	99.6924	94.5567
39	5.9523	56.2099	99.5653	95.0748

d. Comparison

We compare the performance of all variations of ANN. In which we find that for all cases Performance of ANN-EALR has better performance than the ANN-ALR and ANN. For comparison purpose we kept the number of epochs 2000 and hidden layer size 4 to 39.

Comparison with respect to RMSE is tabulated in Table 8. Comparison with respect to MAPA is tabulated in Table 9.

For best case ANN-EALR has RMSE is 0.8892 which is less than traditional ANN and ANN-ALR. Initially for lees number of hidden layer size under-fitting occurs shown in first row of Table 8

Table 9. RMSE Performance comparison on Dataset 1

Hidden Layer Size	RMSE		
	ANN Validation	ANN-ALR Validation	ANN-EALR Validation
4	2.3333	3.9300	2.4928
9	**1.3246**	1.0296	0.9780
14	1.7619	1.0548	**0.8892**
19	2.0577	1.0534	0.9068
24	2.4261	**0.9590**	1.6900
29	4.1495	1.0974	1.0564
34	3.3200	1.0428	1.2177
39	4.7669	1.0454	1.0547

International Journal of Engineering Applied Sciences and Technology, 2021
Vol. 6, Issue 4, ISSN No. 2455-2143, Pages 266-275
Published Online August 2021 in IJEAST (http://www.ijeast.com)

To performance measurement in MAPA for best case ANN-EALR has accuracy 90.6346 which is highest than other two approach.

Table 10. MAPA Performance comparison on Dataset 1

Hidden Layer Size	MAPA Dataset 1		
	ANN Validation	ANN-ALR Validation	ANN-EALR Validation
4	83.2946	73.7637	78.8574
9	**86.7309**	88.0601	89.5805
14	85.4102	87.5138	**90.6346**
19	83.445	87.4215	89.7008
24	82.8933	**88.847**	87.3894
29	82.2054	87.862	88.4241
34	80.4652	87.1492	85.5055
39	69.2925	87.7128	88.6451

In Figure 3 is drawn MAPS versus hidden layer size for all ANN variations which shows that ANN-EALR is give best performance in all cases.

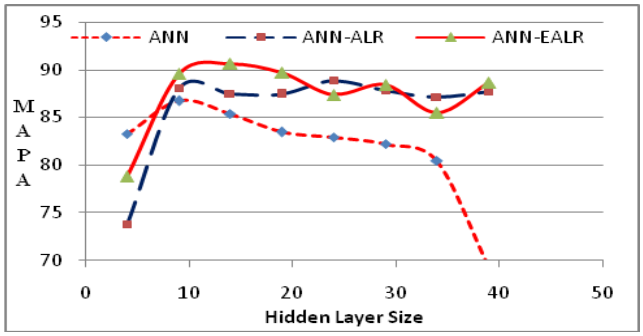

Figure 3. ANN, ANN-ALR and ANN-EALR on Dataset 1

Same procedure applies to Dataset 2 and result tabulated in Table 10 and Table 11. For best we get best result for ANN-EALR in terms of RMSE is 54.2099 whereas ANN-ALR has 61.5791 and ANN has 75.5362.

Table 10 RMSE Performance comparison on Dataset 2

Hidden Layer Size	RMSE Dataset 2		
	ANN Validation	ANN-ALR Validation	ANN-EALR Validation
4	96.5184	97.4773	77.9943
9	99.1723	124.7	70.0866
14	82.9639	94.802	67.1637
19	87.1491	67.7429	**54.2099**
24	**75.5362**	**61.5791**	55.8696
29	80.7726	77.2192	77.4789
34	77.5118	89.2442	63.0233
39	127.409	94.87	60.1889

For best we get best result for ANN-EALR in terms of MAPA is 95.2591 whereas ANN-ALR has 93.2085 and ANN has 92.3562.

Table 11.MAPA Performance comparison on Dataset 2

Hidden Layer Size	MAPA Dataset 2		
	ANN Validation	ANN-ALR Validation	ANN-EALR Validation
4	90.5065	89.7828	92.7469
9	89.7757	86.7506	93.2079
14	91.8808	90.0723	93.0404
19	92.1268	**93.2085**	95.0748
24	91.9908	93.2082	**95.2591**
29	**92.3562**	92.1611	92.4711
34	92.1446	90.6447	94.5567
39	87.3315	90.0234	94.0748

. In Figure 4 is drawn MAPA versus hidden layer size for all ANN variations which shows that ANN-EALR is give best performance in all cases. Performance of ANN-EALR is indicated as continuous red line which is always above the other two approaches shown in Figure 4.

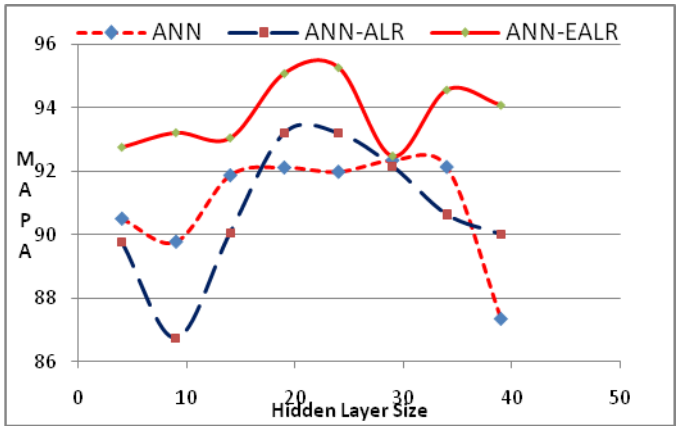

Figure 4. ANN, ANN-ALR and ANN-EALR on Dataset 2

For best cases Actual vs Forecasted result for Dataset 1 considering all approaches presented in Figure 5.

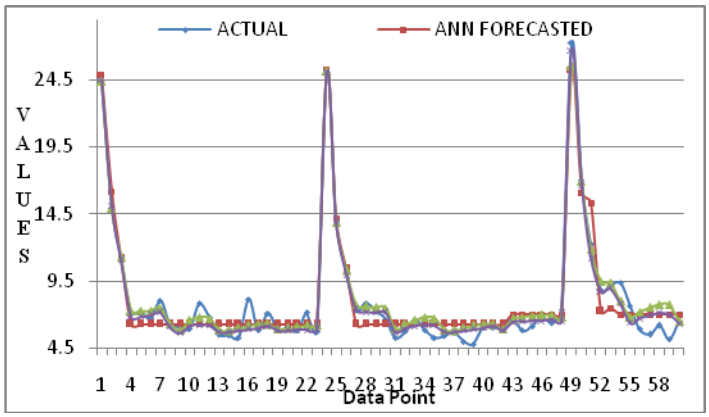

Figure 5. Actual Versus Forecasted on Dataset 1

For best cases Actual vs Forecasted result for Dataset 2 considering all approaches presented in Figure 6.

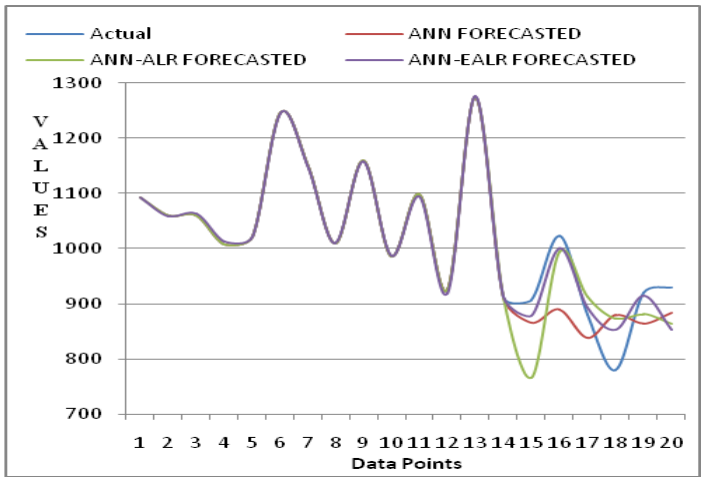

Figure 6. Actual Versus Forecasted on Dataset 2

V. CONCLUSION

Performance of neural network is depending on learning rate, number of hidden layer size. We cannot kept same hidden layer size and learning rate for all the data set patterns. The issue of the amount of hidden node and learning rate is worked out in this study. To see out the optimum hidden layer size we used forward selection approach. In this case the error is decreased by increasing number of hidden layers up to a certain level then the error goes on increasing.

Adaptive learning is best choice to train all data patterns. One of the methods to enhance performance of ANN is adaptive learning rate by comparing previous iteration error. Adaptive learning is also merging with extended adaptive learning in which for adaptation of learning rate is done by comparing n number of previous iterations error. As per Error trend i we update the learning rate given in equation 3.10. For dataset 1 ANN –EALR gives 90.6346 percent accuracy while ANN and ANN-ALR gives 86.7309 and 88.847 respectively. After applying dataset 2 ANN-EALR outperforms in all cases. For best case ANN-EALR has accuracy of 95.2591 which is better than other two variations.

In future ANN is also hybridized with GA to find automatic ANN architecture parameters to get optimum result.

VI. REFERENCES

[1] Montgomery, D. C., Jennings, C. L., &Kulahci, M. (2015). Introduction to time series analysis and forecasting. John Wiley & Sons.

[2] Devi, C. J., Reddy, B. S. P., Kumar, K. V., Reddy, B. M., & Nayak, N. R. (2012). ANN approach for weather prediction using back propagation. International Journal of Engineering Trends and Technology, 3(1), 19-22.

[3] Zorn, D. M. (2011). Enactive education: Dynamic co-emergence, complexity, experience, and the embodied mind (Doctoral dissertation, University of Toronto).

[4] Mukhopadhyay, S., Samaddar, S., & Nargundkar, S. (2008). Predicting Electronic Commerce Growth: An Integration of Diffusion and Neural Network Models. Journal of Electronic Commerce Research, 9(4), 280.

[5] Afzal, S., & Wani, M. A. (2015). Comparative Study of Adaptive Learning Rate with Momentum and Resilient Back Propagation Algorithms for Neural Net Classifier Optimization. International Journal of Distributed and Cloud Computing, 2(1).

[6] http://cs231n.github.io/neural-networks-3/

[7] Panchal, Gaurang, et al. "Determination of over-learning and over-fitting problem in back propagation neural network." International Journal on Soft Computing 2.2 (2011): 40-51.

[8] International journal of forecasting, 14(1), 35-62.Panchal, G., Ganatra, A., Kosta, Y. P., & Panchal, D. (2011). Behaviour analysis of multilayer perceptron's with multiple hidden neurons and hidden layers. International Journal of Computer Theory and Engineering, 3(2), 332.

[9] Zhang, G., Patuwo, B. E., & Hu, M. Y. (1998). Forecasting with artificial neural networks:: The state of the art.

[10] Lahiri, S. K., & Ghanta, K. C. (2009). Artificial neural network model with the parameter tuning assisted by a differential evolution technique: The study of the holdup of the slurry flow in a pipeline. Chemical Industry and Chemical Engineering Quarterly/CICEQ, 15(2), 103-117.

[11] Saduf, M. A. W. (2013). Comparative study of back propagation learning algorithms for neural networks. International Journal of Advanced Research in Computer Science and Software Engineering, 3(2), 1151-6.

[12] Thota, L. S., & Changalasetty, S. B. (2013). Optimum learning rate for classification problem with mlp in data mining. Advances in Engineering and Technology, 6(1), 35-44.

[13] Pankaj Sharma, Naveen Malik, Naeem Akhtar, Rahul,and Hardeep Rohilla(2013). Feed Forward Network Review," International Journal of Advanced Research in Engineering and Applied Sciences, Vol. 2 | No. 10 .

[14] Panchal, F. S., & Panchal, M. (2014). Review on Methods of Selecting Number of Hidden Nodes in Artificial Neural Network. International Journal of Computer Science and Mobile Computing, 3(11), 455-464.

[15] Hyndman, R. J., &Athanasopoulos, G. (2014). Forecasting: principles and practice. OTexts.

[16] http://www.philbrierley.com/main.html?code/matlab.html&code/codeleft.html

[17] Li, J., Cheng, J. H., Shi, J. Y., & Huang, F. (2012). Brief introduction of back propagation (BP) neural network algorithm and its improvement. In Advances in Computer Science and Information Engineering (pp. 553-558). Springer Berlin Heidelberg.

[18] Kumar, P., &Walia, E. (2006). Cash Forecasting: An Application of Artificial Neural Networks in Finance. IJCSA, 3(1), 61-77.

[19] Veenadhari, S., Misra, B., & Singh, C. (2014, January). Machine learning approach for forecasting crop yield based on climatic parameters. In Computer Communication and Informatics (ICCCI), 2014 International Conference on (pp. 1-5). IEEE.

IJEAST

INTERNATIONAL JOURNAL
OF ENGINEERING APPLIED SCIENCE
AND TECHNOLOGY

ABOUT IJEAST

International Journal of Engineering Applied Science and Technology (IJEAST) is a peer-reviewed, open access journal that publishes high-quality research papers in the field of Engineering, Applied Science and Technology.

IJEAST aims to provide a platform for researchers, academicians, and professionals to share their innovative ideas, research findings, and practical experiences with the global scientific community.

FOCUS AREAS

- Engineering
- Applied Science
- Technology
- Innovation & Development
- Interdisciplinary Studies

PEER REVIEWED
All submissions are rigorously peer reviewed to ensure quality.

OPEN ACCESS
Free and unrestricted access to research for all.

GLOBAL REACH
Connecting researchers and professionals worldwide.

TIMELY PUBLICATION
We ensure a swift and efficient publication process.

For more information, visit our website
www.ijeast.com

INTERNATIONAL JOURNAL
OF ENGINEERING APPLIED SCIENCE
AND TECHNOLOGY

editor@ijeast.com
www.ijeast.com
India

2455-2143